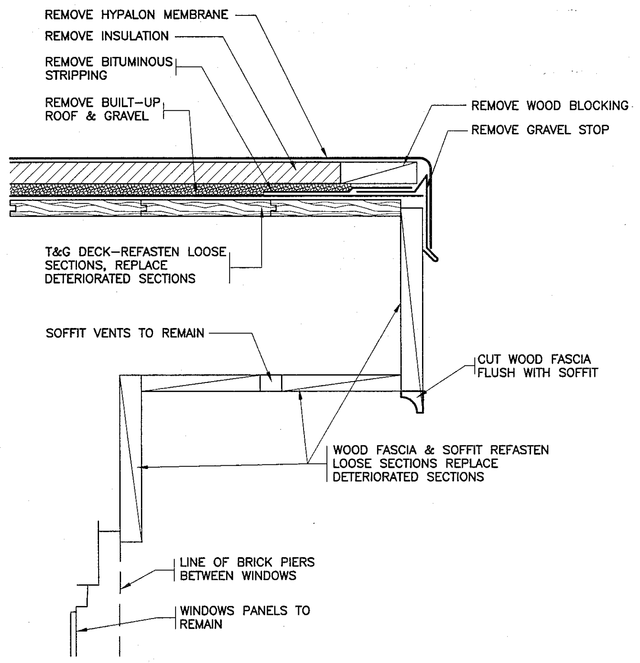

1 EXISTING EAVE
SCALE: 3" = 1'-0"

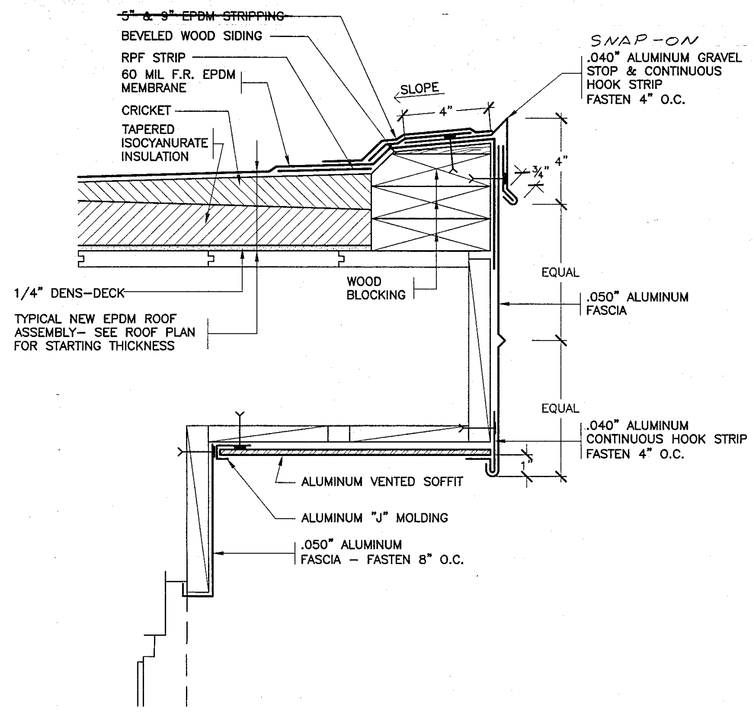

2 REVISED EAVE
SCALE: 3" = 1'-0"

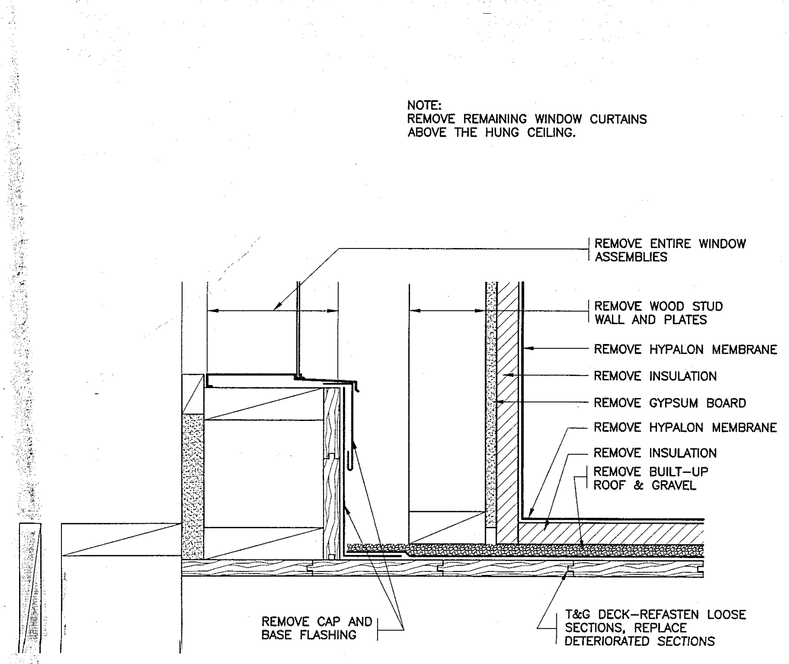

3 EXISTING BASE AT CLERESTORY
SCALE: 3" = 1'-0"

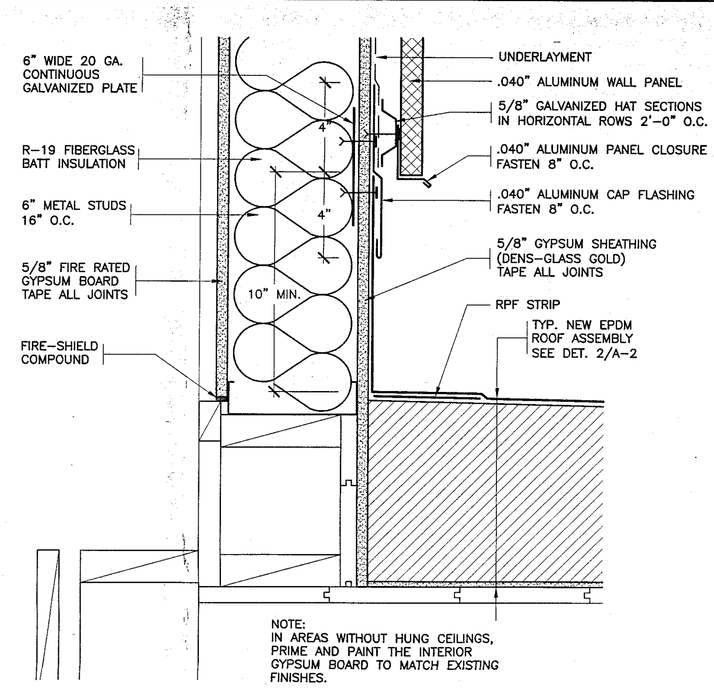

4 REVISED BASE AT CLERESTORY
SCALE: 3" = 1'-0"

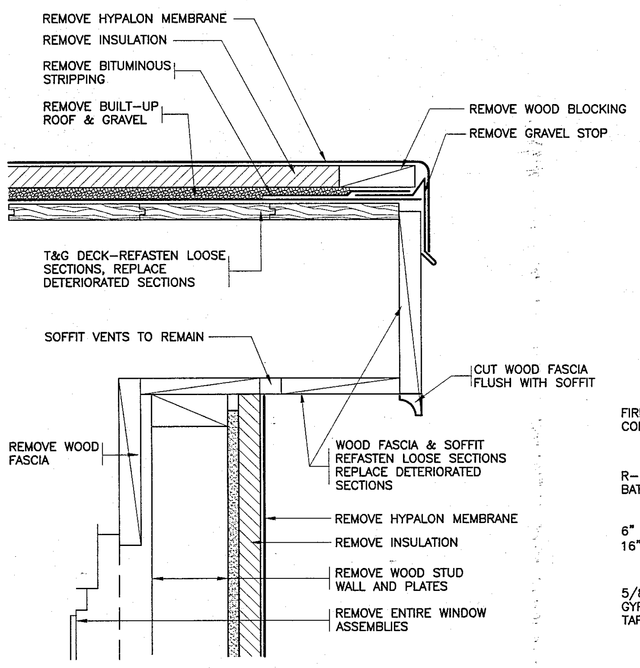

5 EXISTING EAVE AT CLERESTORY
SCALE: 3" = 1'-0"

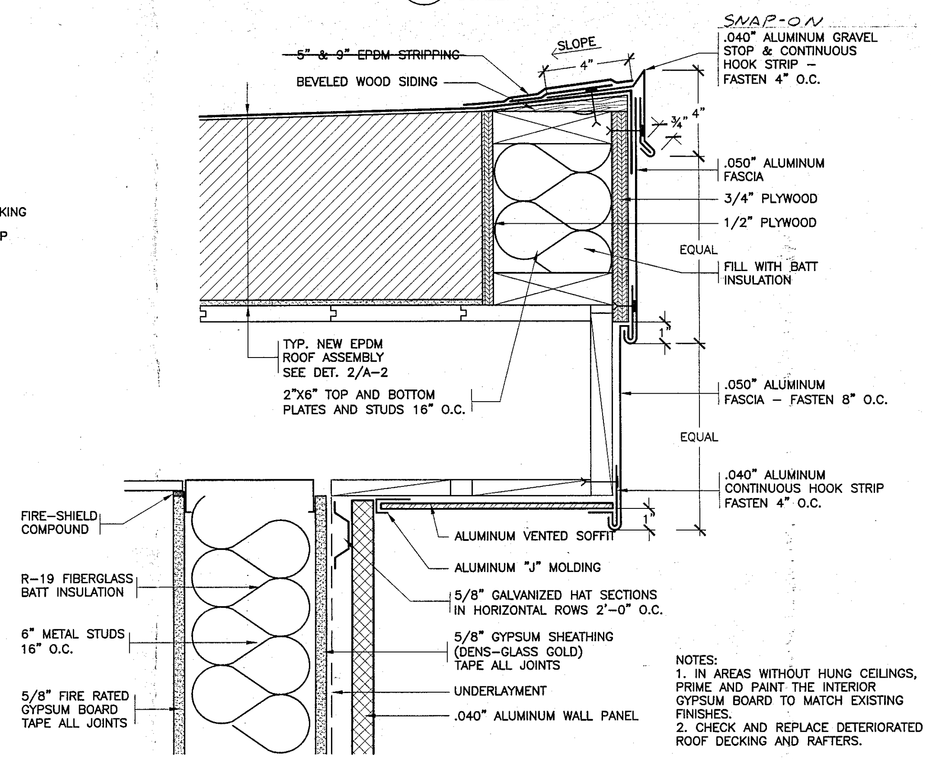

6 REVISED EAVE AT CLERESTORY
SCALE: 3" = 1'-0"

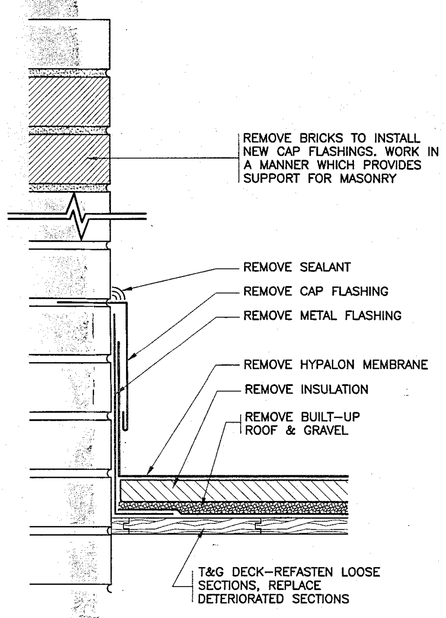

7 EXISTING BASE
SCALE: 3" = 1'-0"

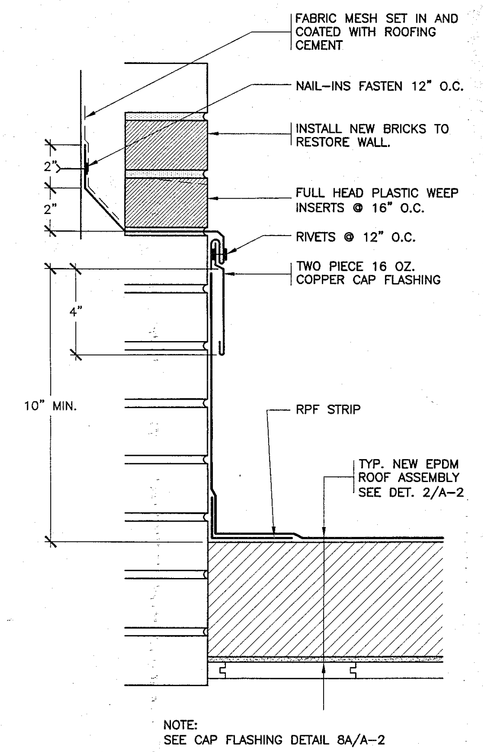

8 REVISED BASE
SCALE: 3" = 1'-0"

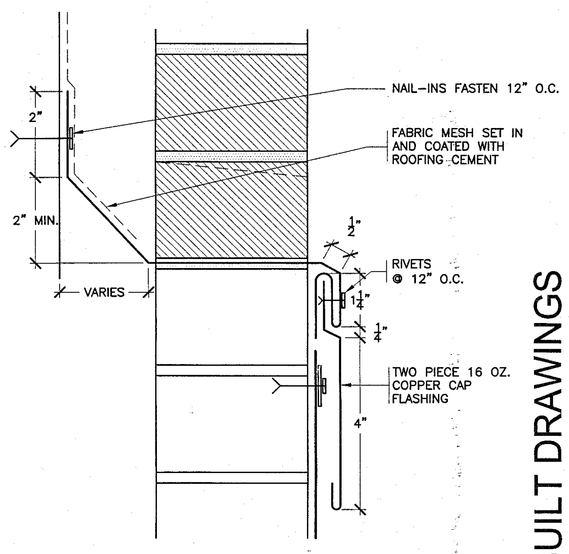

8A CAP FLASHING
SCALE: 6" = 1'-0"

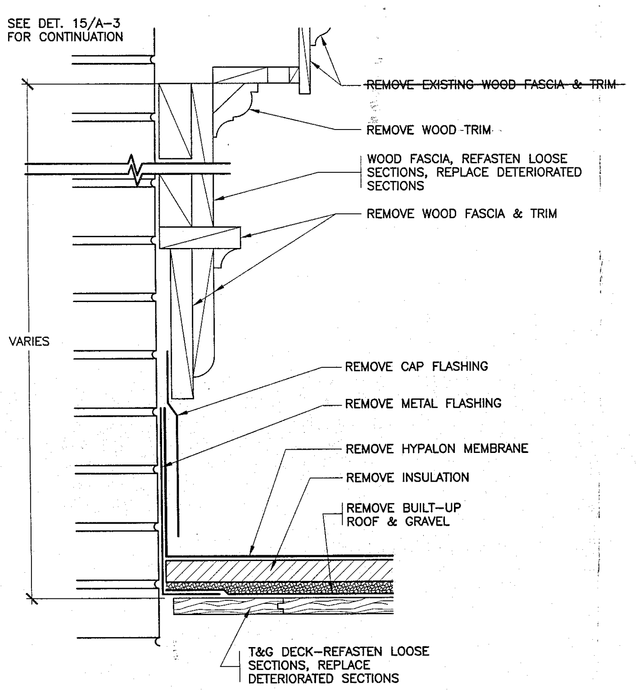

9 EXISTING BASE
SCALE: 3" = 1'-0"

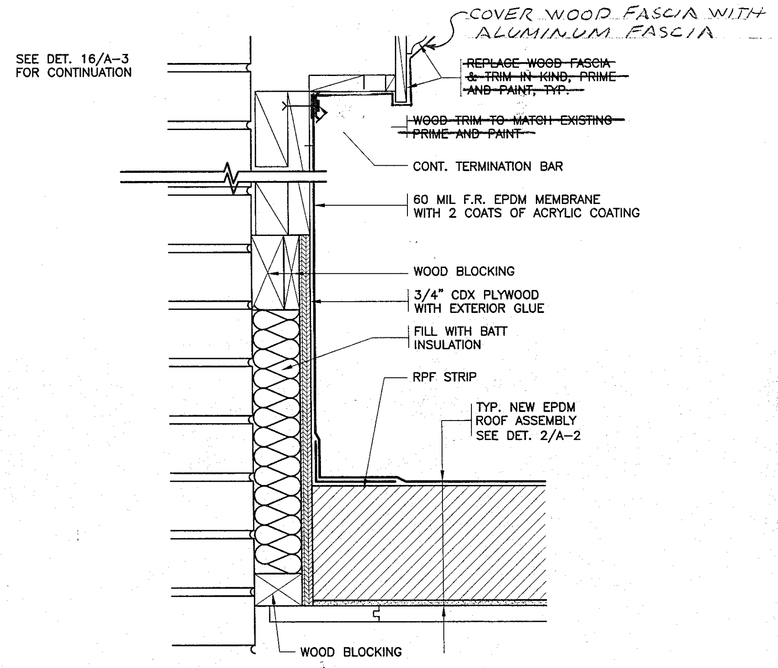

10 REVISED BASE
SCALE: 3" = 1'-0"

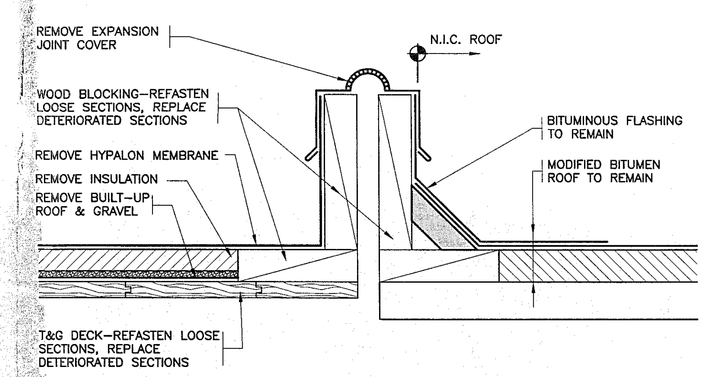

11 EXISTING EXPANSION JOINT
SCALE: 3" = 1'-0"

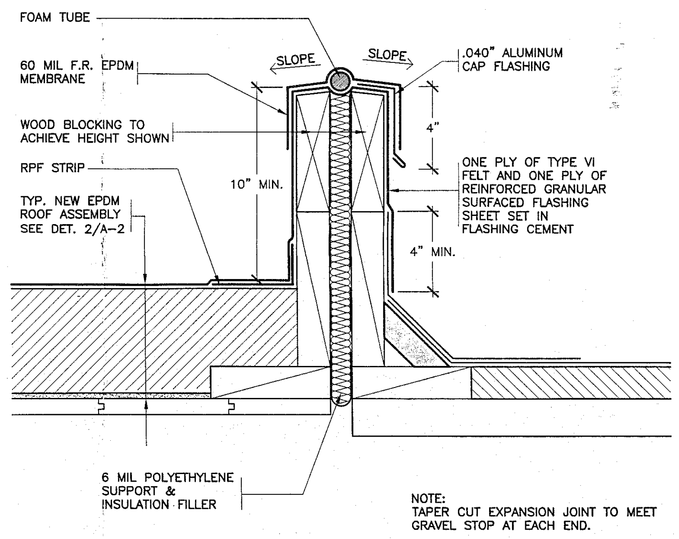

12 REVISED EXPANSION JOINT
SCALE: 3" = 1'-0"

AS-BUILT DRAWINGS

RECORD DRAWING CERTIFICATION
☑ AS BUILT-CHANGES AS NOTED
☐ AS BUILT-NO CHANGES
CONTRACTOR
NAME BALL RESTAURANT
SIGNATURE
TITLE ESTIMATOR
DATE 12-9-09
PROJECT COORDINATOR
NAME
SIGNATURE
TITLE
DATE

LEED INDUSTRIES
114 PEARL STREET
PORT CHESTER, N.Y. 10573

PROJECT TITLE
ROOF REPLACEMENT
82 PARK AVENUE
DANBURY, CT 06810

DRAWING TITLE
ROOF DETAILS

DATE	ISSUED TO
8-24-2009	BLDG DEPT REVS
7-09-2009	BID

SCALE: AS NOTED
DRAWN BY
CHECKED BY
DRAWING NO. A-2
FILE NO. 08870.00

DANBURY BID NO. 07-09-10-01
C.T. BUREAU OF SCHOOL FACILITIES PROJECT NO. TEMP 034 - GPVX

PLOT DATE: December 08, 2009 - 10:18am

FILE: I:\08870.00 Danbury Park Ave. Elementary\DRAWINGS\SUBMISSIONS\AS BUILTS\A-2 Danbury ES Details 1-12 Rev 2009 0824.dwg