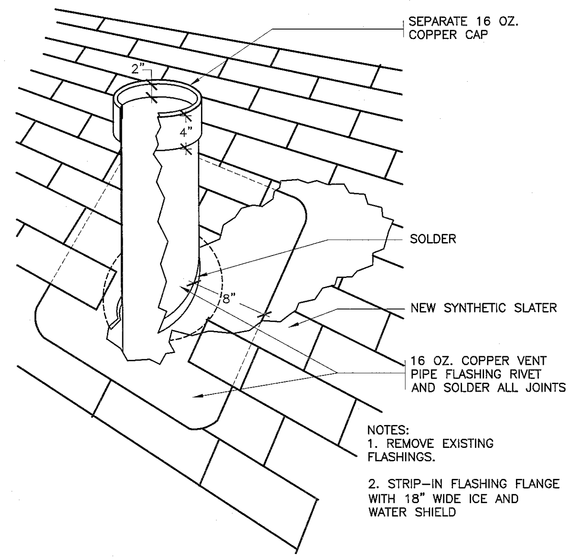

25 REVISED VENT PIPE (SLATE ROOF)
SCALE: N.T.S.

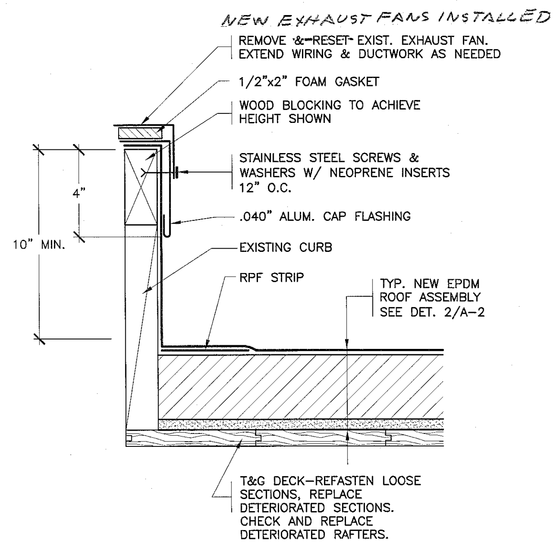

26 REVISED EXHAUST FAN
SCALE: 3" = 1'-0"

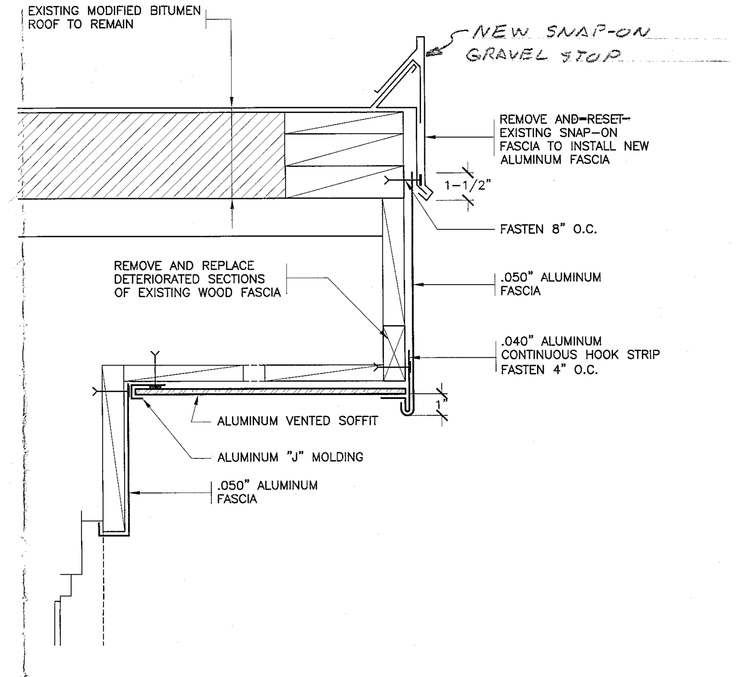

27 REVISED EAVE AT EXISTING ROOF
SCALE: 3" = 1'-0"

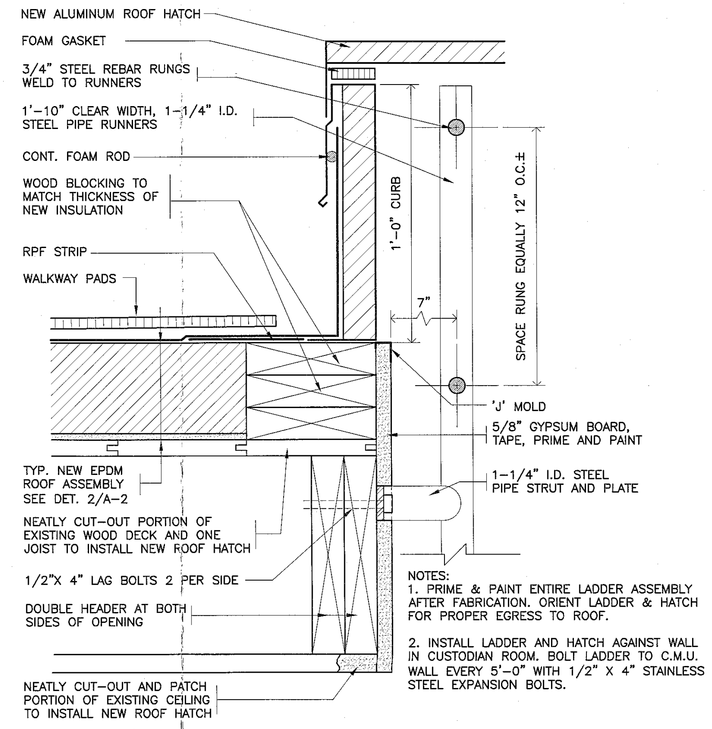

28 NEW ROOF HATCH
SCALE: 3" = 1'-0"

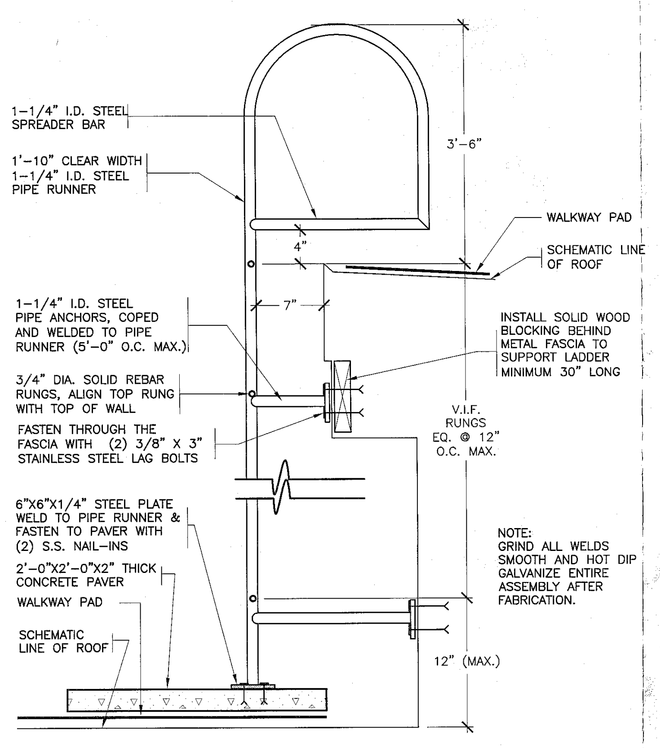

29 NEW ROOF LADDER
SCALE: N.T.S.

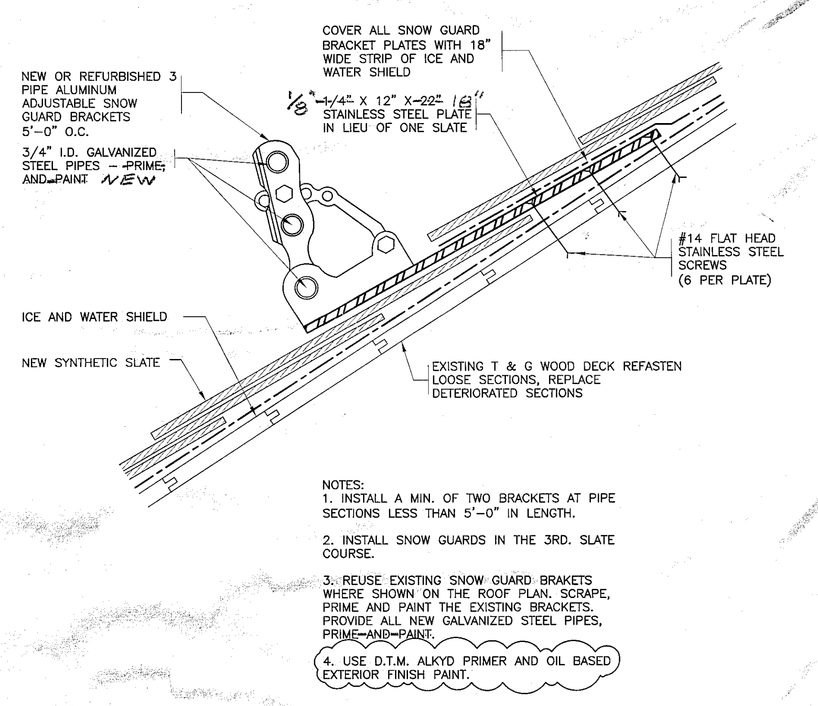

30 SNOW GUARD
SCALE: N.T.S.

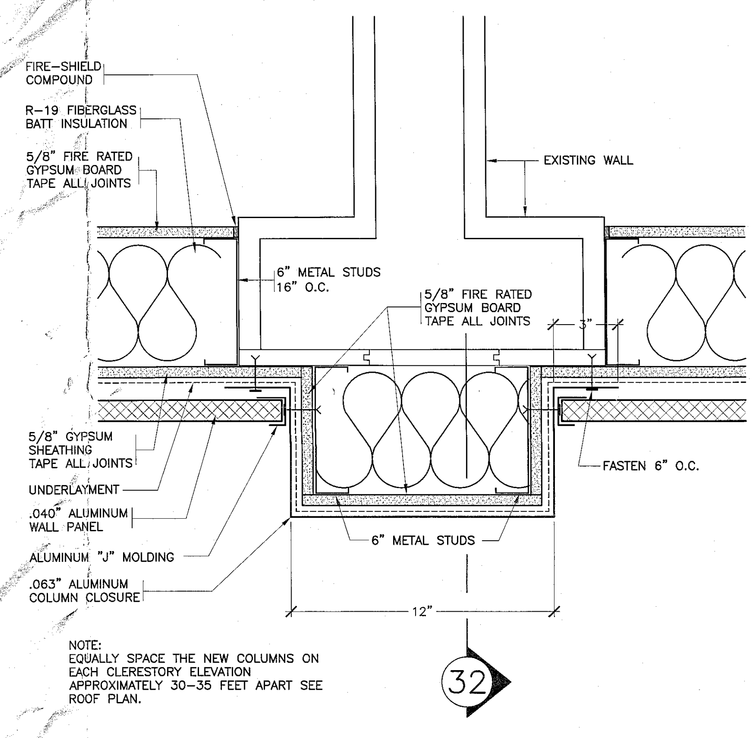

31 PLAN VIEW AT NEW COLUMN
SCALE: N.T.S.

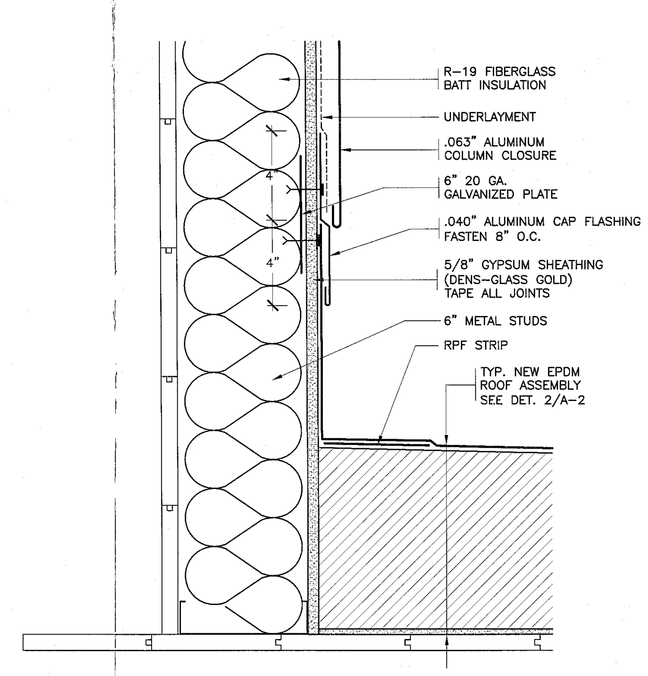

32 SECTION AT NEW COLUMN
SCALE: N.T.S.

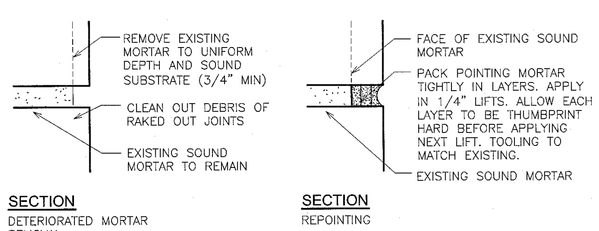

33 DETAIL – MASONRY REPOINTING
SCALE: N.T.S.

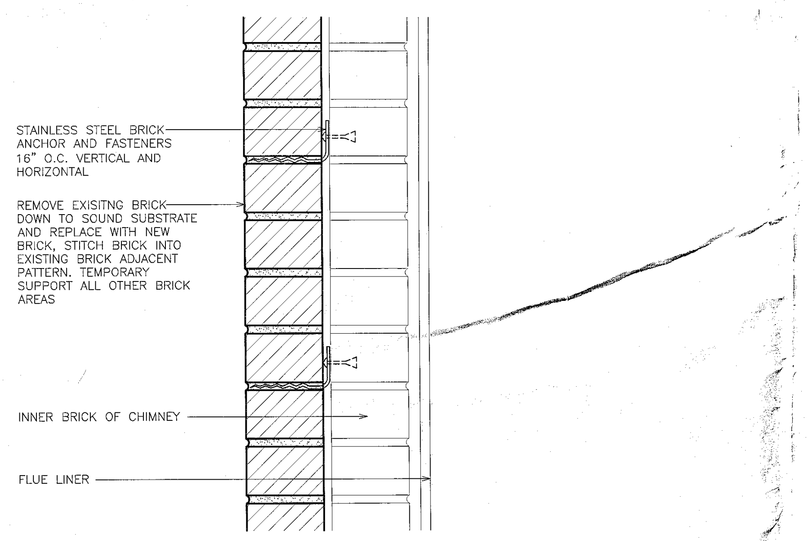

34 DETAIL – BRICK REPLACEMENT
SCALE: N.T.S.

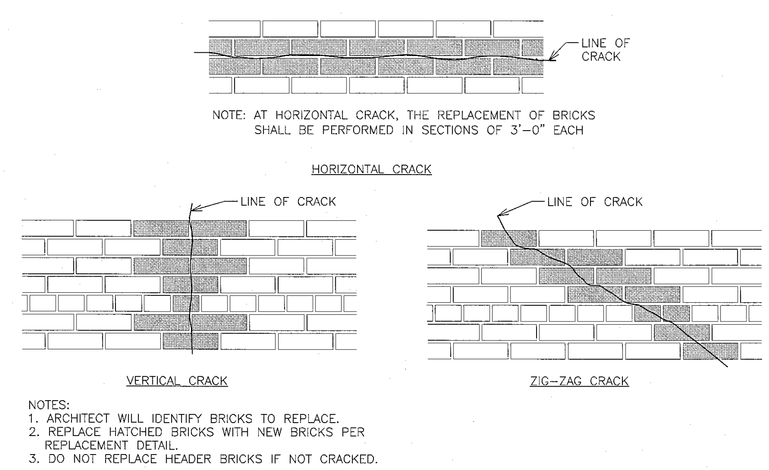

35 DETAIL – BRICK STICHING PATTERNS
SCALE: N.T.S.

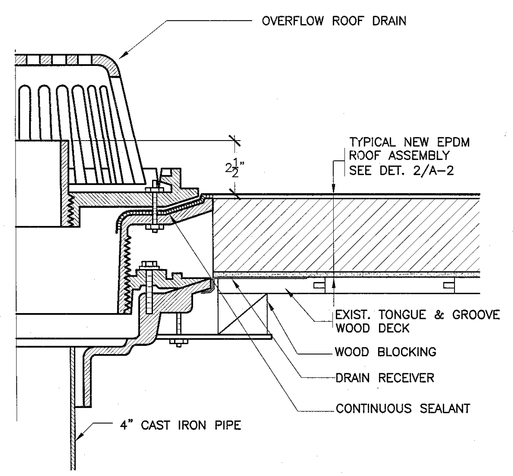

36 OVERFLOW ROOF DRAIN
SCALE: N.T.S.

AS-BUILT DRAWINGS

RECORD DRAWING CERTIFICATION
☑ AS BUILT-CHANGES AS NOTED
☐ AS BUILT-NO CHANGES

CONTRACTOR
NAME Paul Rostgaards
SIGNATURE
TITLE Estimator
DATE 12-9-09

PROJECT COORDINATOR
NAME
SIGNATURE
TITLE
DATE

LEED INDUSTRIES
114 PEARL STREET
PORT CHESTER, N.Y. 10573

PROJECT TITLE:
PARK AVENUE ELEMENTARY SCHOOL
ROOF REPLACEMENT
52 PARK AVENUE
DANBURY, CT 06810

DRAWING TITLE
ROOF DETAILS & POINTING DETAILS

8-24-2009	BLDG DEPT REVS
7-09-2009	BID
DATE	ISSUED TO
SCALE AS NOTED	DRAWING NO. A-4
DRAWN BY	
CHECKED BY	FILE NO. 08870.00

DANBURY BID NO. 07-08-10-01
C.T. BUREAU of SCHOOL FACILITIES PROJECT NO. TEMP 024 - GPVX

PLOT DATE: December 08, 2009 - 10:19am

FILE: I:\08870.00 Danbury Park Ave. Elementary\DRAWINGS\SUBMISSIONS\AS BUILTS\A-4 Danbury ES Details 25- Rev 2009 0824.dwg