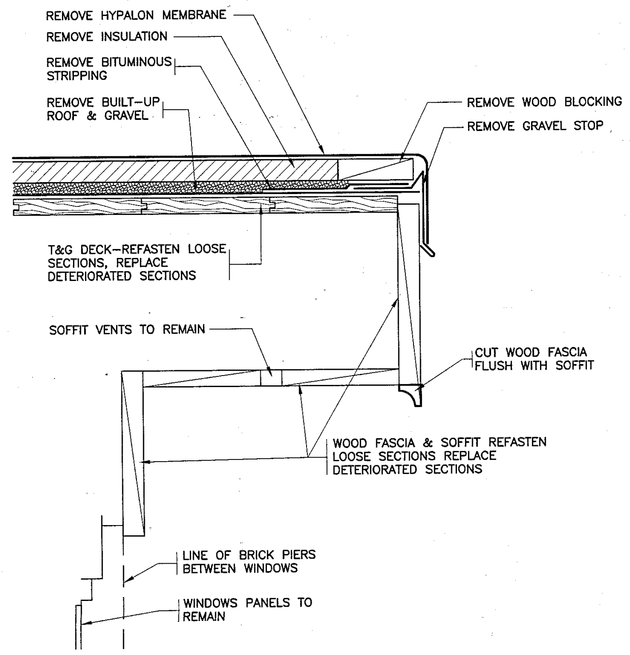

1 EXISTING EAVE
SCALE: 3" = 1'-0"

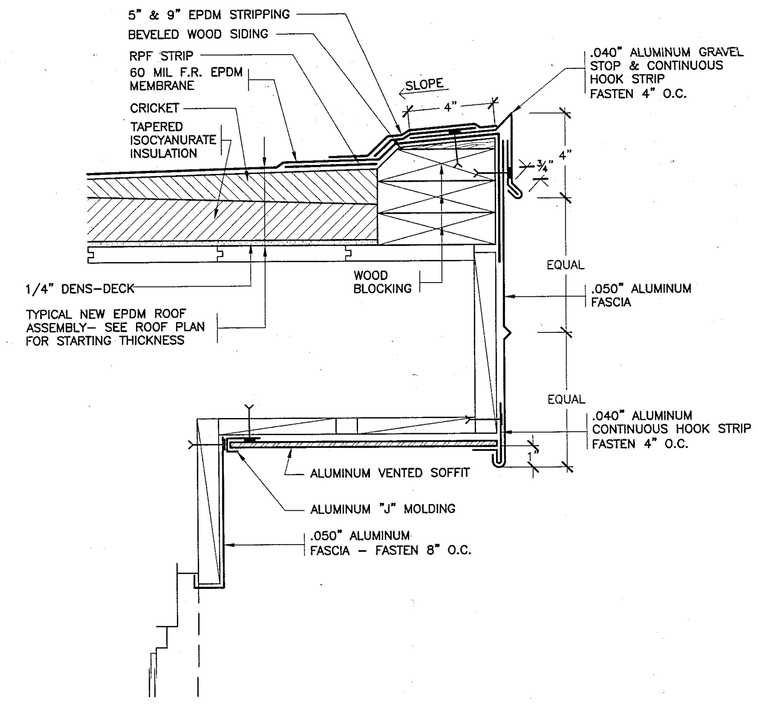

2 REVISED EAVE
SCALE: 3" = 1'-0"

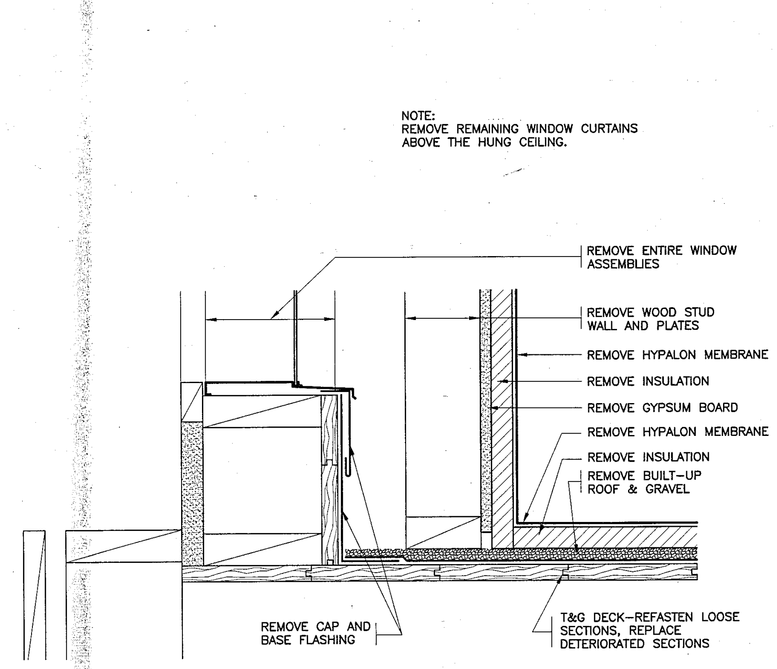

3 EXISTING BASE AT CLERESTORY
SCALE: 3" = 1'-0"

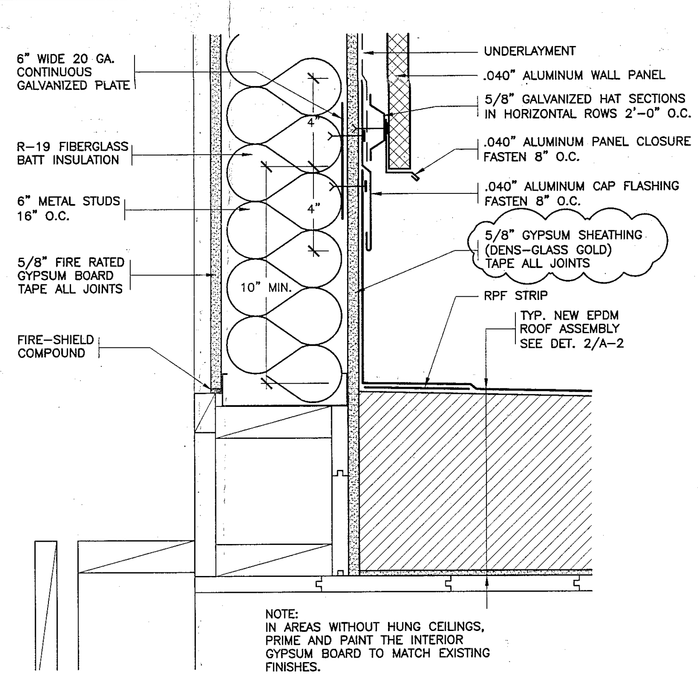

4 REVISED BASE AT CLERESTORY
SCALE: 3" = 1'-0"

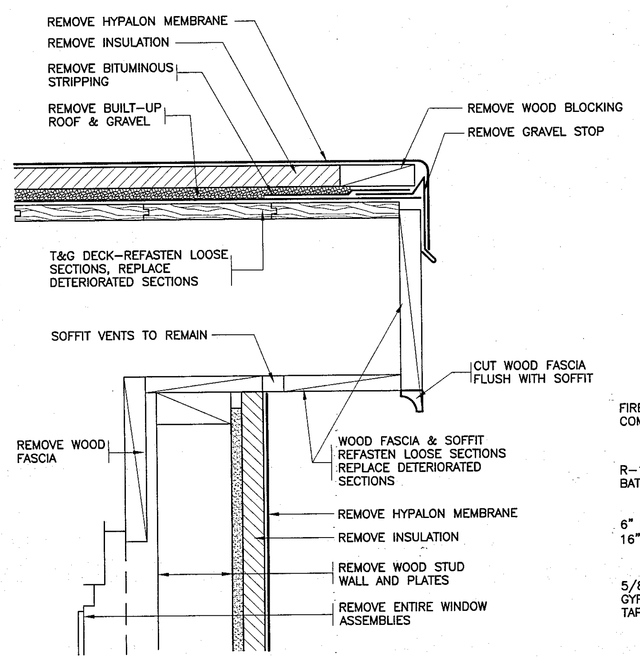

5 EXISTING EAVE AT CLERESTORY
SCALE: 3" = 1'-0"

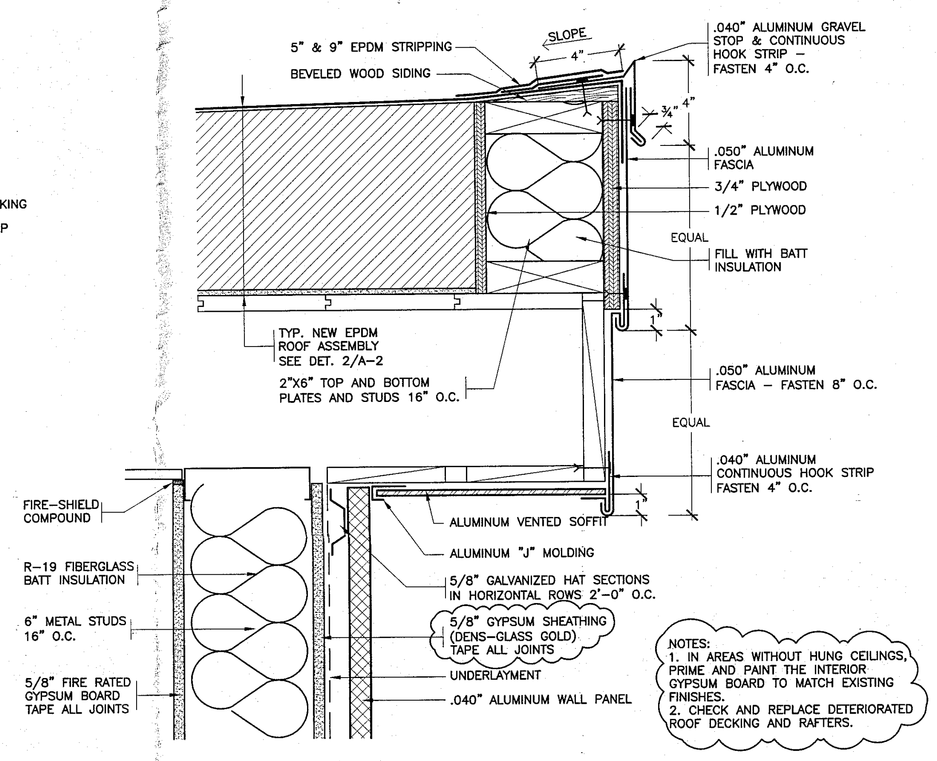

6 REVISED EAVE AT CLERESTORY
SCALE: 3" = 1'-0"

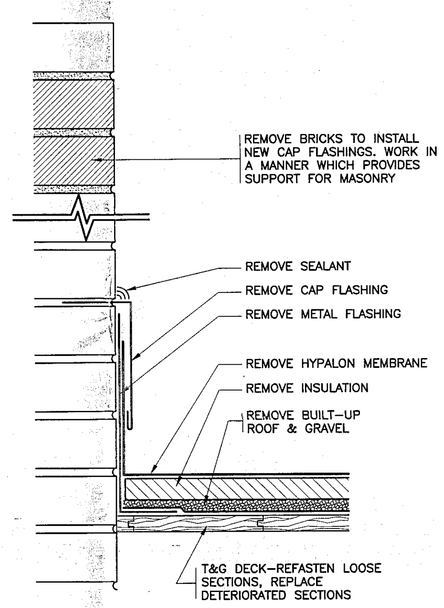

7 EXISTING BASE
SCALE: 3" = 1'-0"

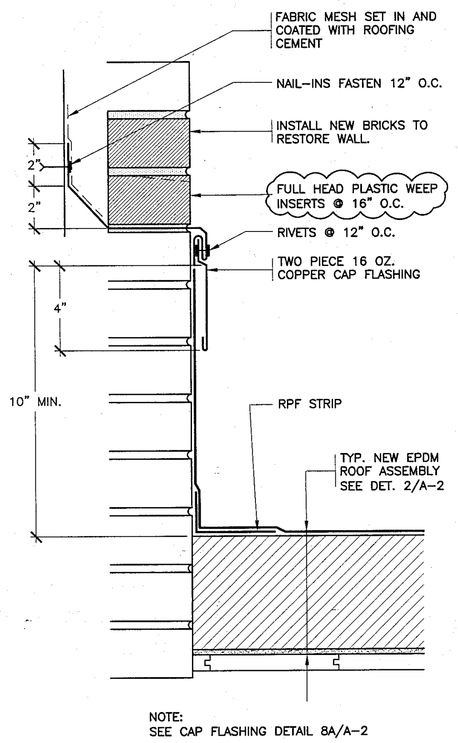

8 REVISED BASE
SCALE: 3" = 1'-0"

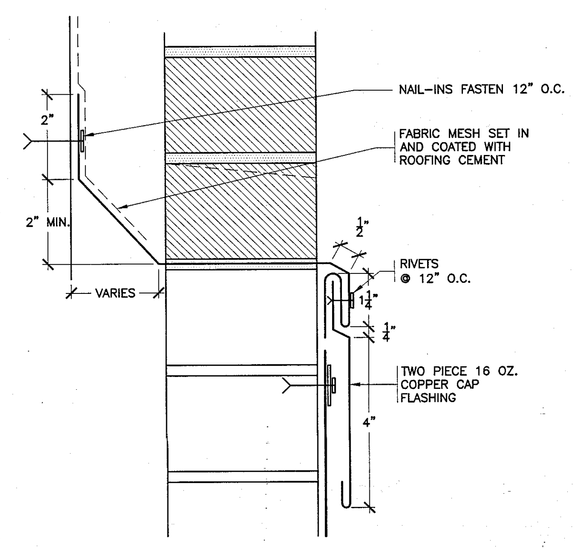

8A CAP FLASHING
SCALE: 6" = 1'-0"

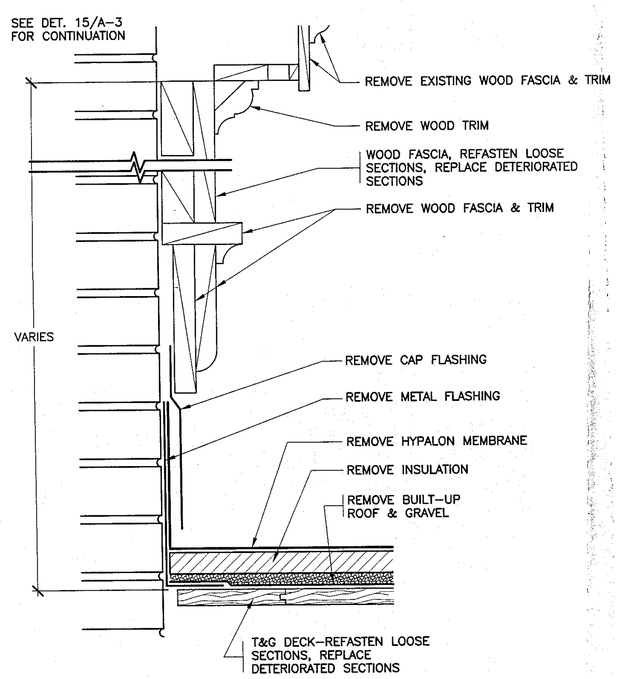

9 EXISTING BASE
SCALE: 3" = 1'-0"

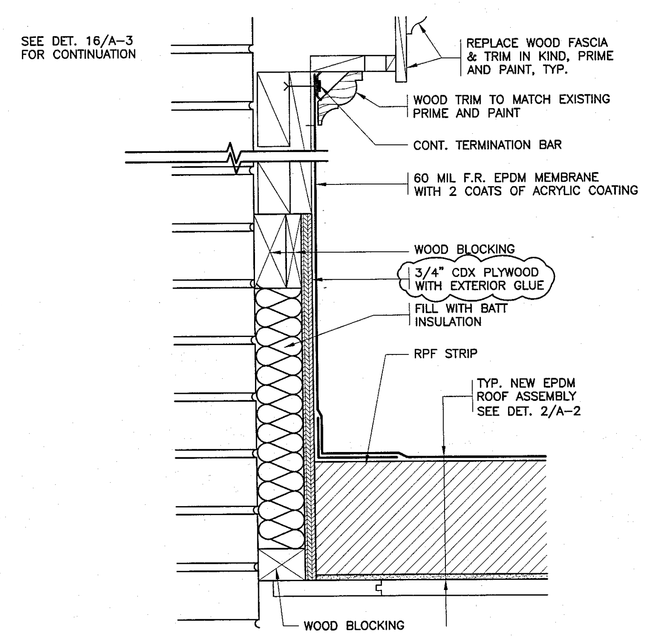

10 REVISED BASE
SCALE: 3" = 1'-0"

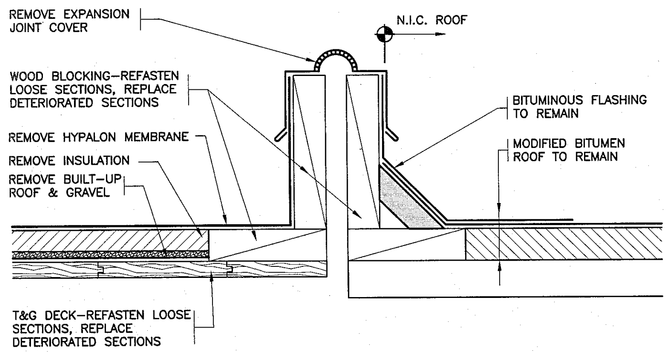

11 EXISTING EXPANSION JOINT
SCALE: 3" = 1'-0"

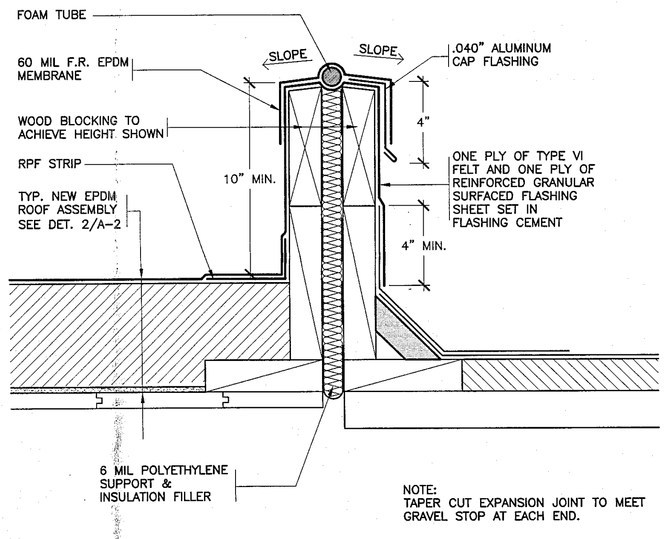

12 REVISED EXPANSION JOINT
SCALE: 3" = 1'-0"

AS PER USA CONGRESS ARCHITECTURAL WORKS COPYRIGHT PROTECTION ACT, ALL LOGOS AND DESIGNS INCLUDING DERIVATIVES THEREOF, ALL DRAWINGS AND SPECIFICATIONS CONSTITUTE THE ORIGINAL COPYRIGHT WORK BY FULLER AND D'ANGELO, P.C. PROPRIETARY TO THE FIRM. DRAWINGS AND SPECIFICATIONS AS INSTRUMENTS OF SERVICE BY F&D ARE CREATED BY F&D FOR THE PROJECT SHOWN AND BOUND BY THE EXPECTATION OF PROPERTY OF F&D. ANY REPRODUCTION WITHOUT THE PRIOR CONSENT OF F&D IS PROHIBITED.

FULLER D'ANGELO P.C.
ARCHITECTS PLANNERS
46 RIVERSIDE ROAD ELMSFORD, NEW YORK 10523
TEL. 914.592.4444 FAX 914.592.1919
WWW.FULLERDANGELO.COM
Copyright 2009 All Rights Reserved by FULLER & D'ANGELO P.C.

STATE OF CONNECTICUT JOHN D'ANGELO #11373 LICENSED ARCHITECT

PROJECT TITLE
PARK AVENUE ELEMENTARY SCHOOL
ROOF REPLACEMENT
62 PARK AVENUE
DANBURY, CT 06810

DRAWING TITLE
ROOF DETAILS

DATE	ISSUED TO
8-24-2009	BLDG DEPT REVS
7-09-2009	BID
6-23-2009	BSF
6-01-2009	CITY
1-26-2009	90% SUBMISSION

SCALE: AS NOTED
DRAWING NO. A-2
DRAWN BY F & D
CHECKED BY F & D
FILE NO. 08870.00

DANBURY BID NO. 07-09-16-01
C.T. BUREAU OF SCHOOL FACILITIES PROJECT NO. TEMP 034 - GPVX.

PLOT DATE: August 25, 2009 - 8:50am

FILE: I:\08870.00 Danbury Park Ave. Elementary\DRAWINGS\CURRENT\1-F&D\A-2 Danbury ES Details 1-12 Rev 2009 0824.dwg