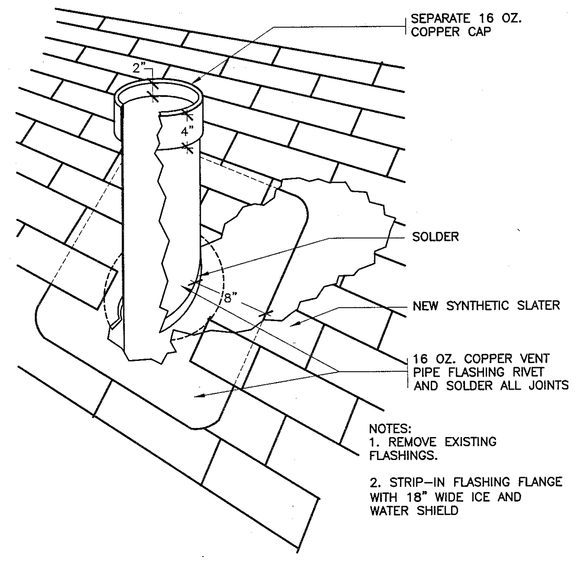

25 REVISED VENT PIPE (SLATE ROOF)
SCALE: N.T.S.

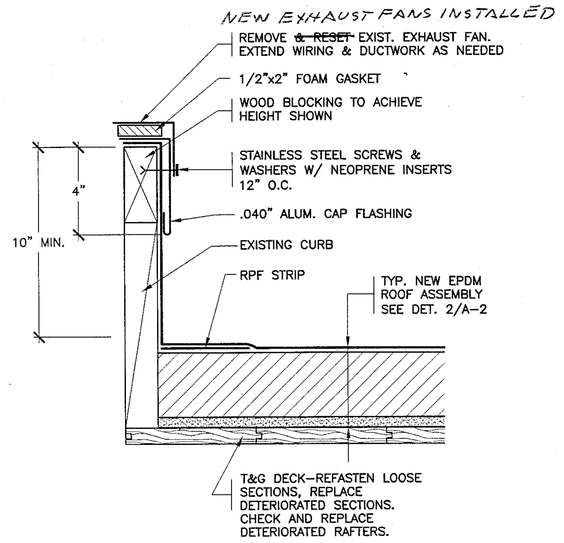

26 REVISED EXHAUST FAN
SCALE: 3" = 1'-0"

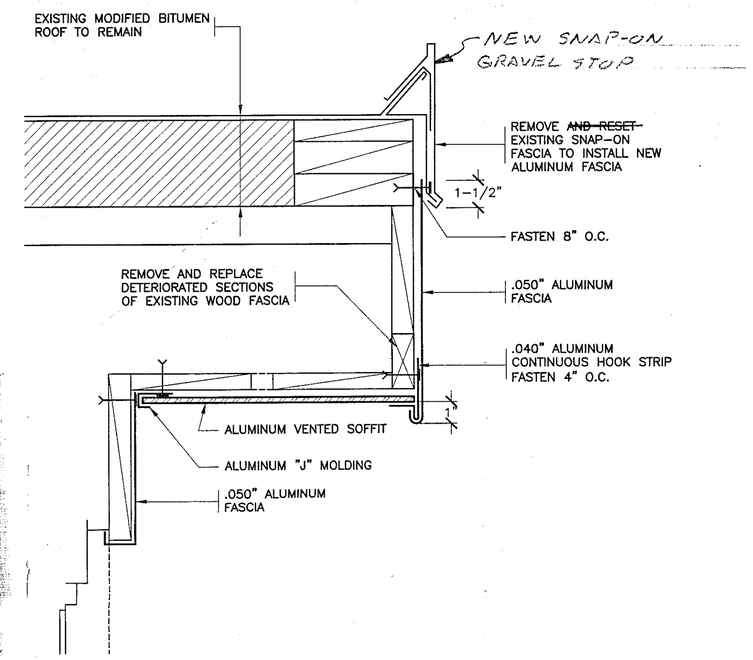

27 REVISED EAVE AT EXISTING ROOF
SCALE: 3" = 1'-0"

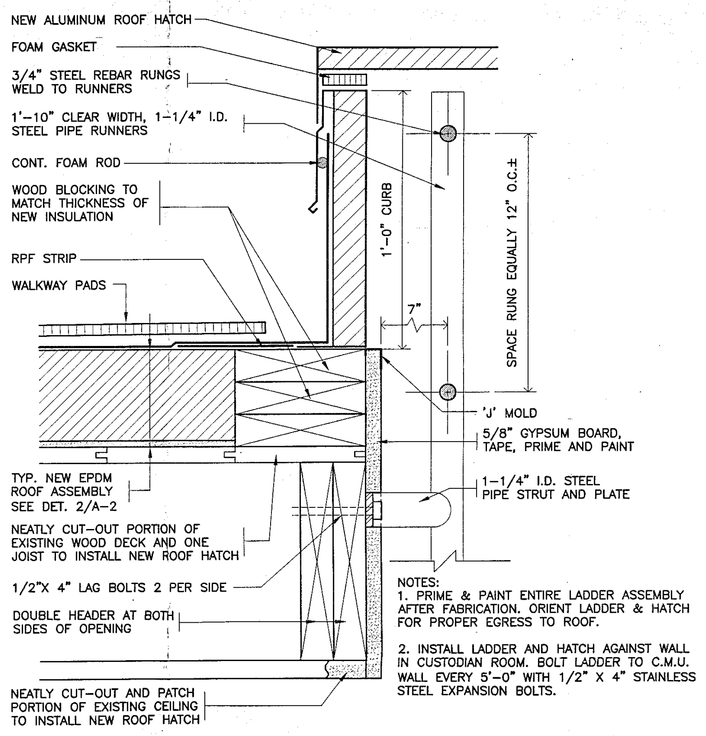

28 NEW ROOF HATCH
SCALE: 3" = 1'-0"

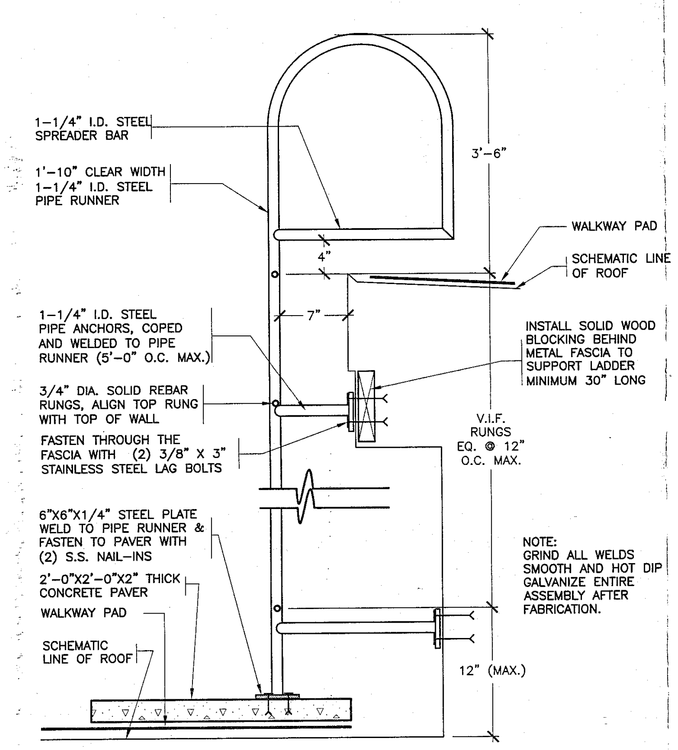

29 NEW ROOF LADDER
SCALE: N.T.S.

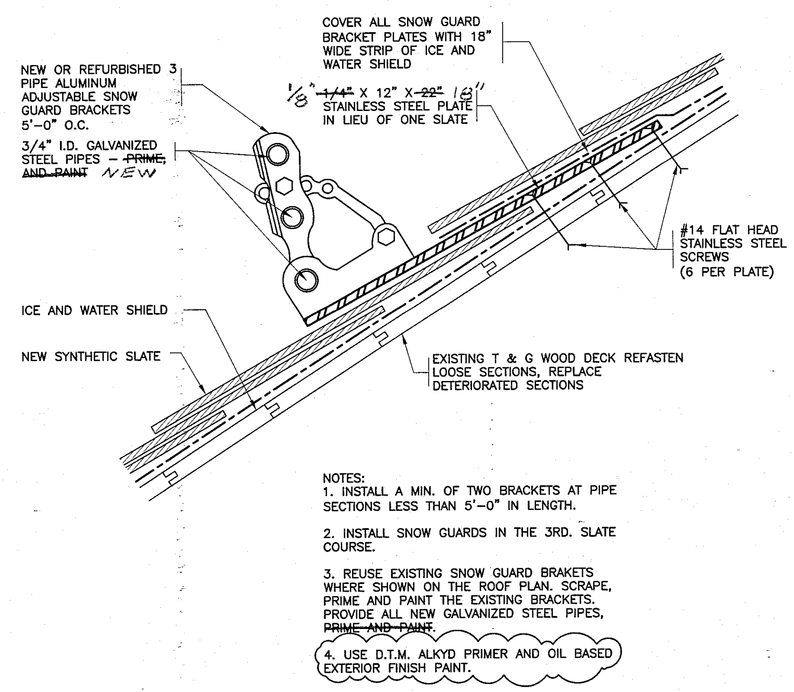

30 SNOW GUARD
SCALE: N.T.S.

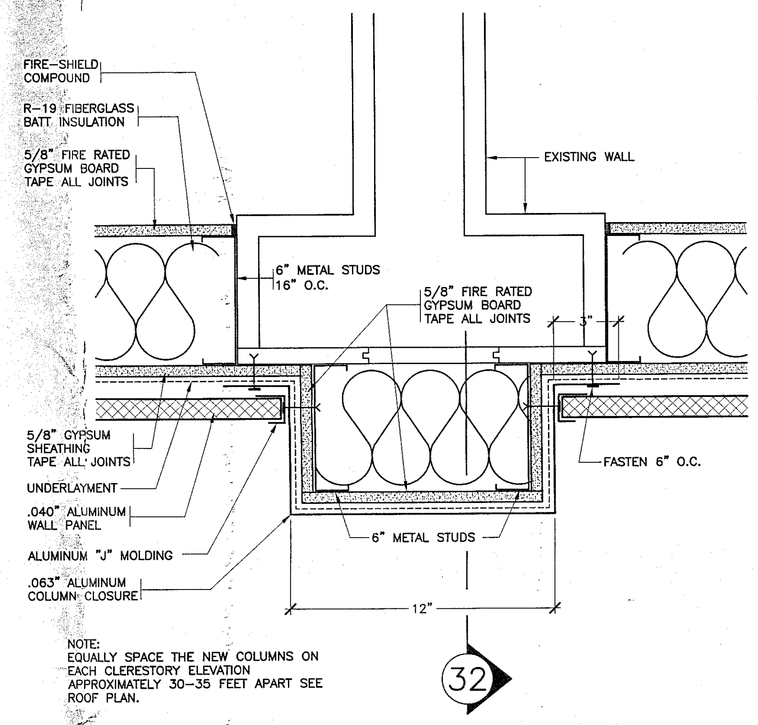

31 PLAN VIEW AT NEW COLUMN
SCALE: N.T.S.

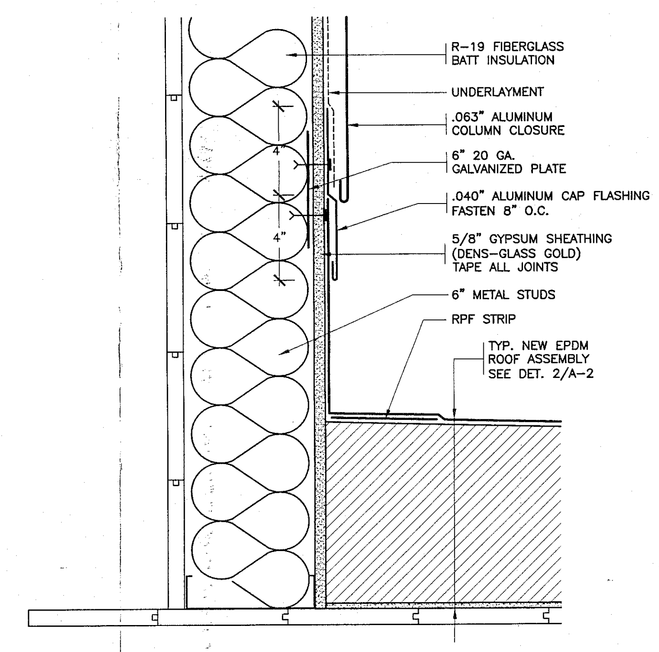

32 SECTION AT NEW COLUMN
SCALE: N.T.S.

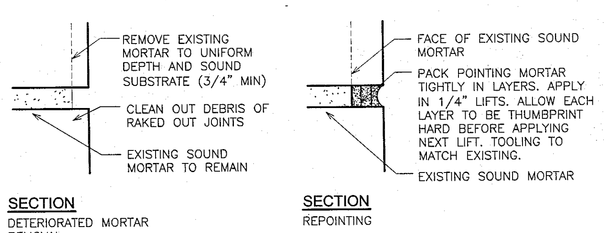

33 DETAIL – MASONRY REPOINTING
SCALE: N.T.S.

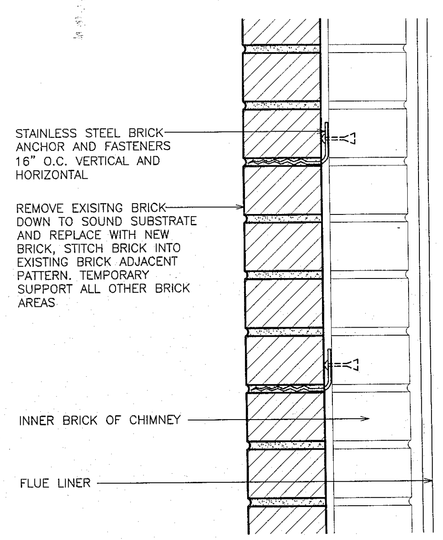

34 DETAIL – BRICK REPLACEMENT
SCALE: N.T.S.

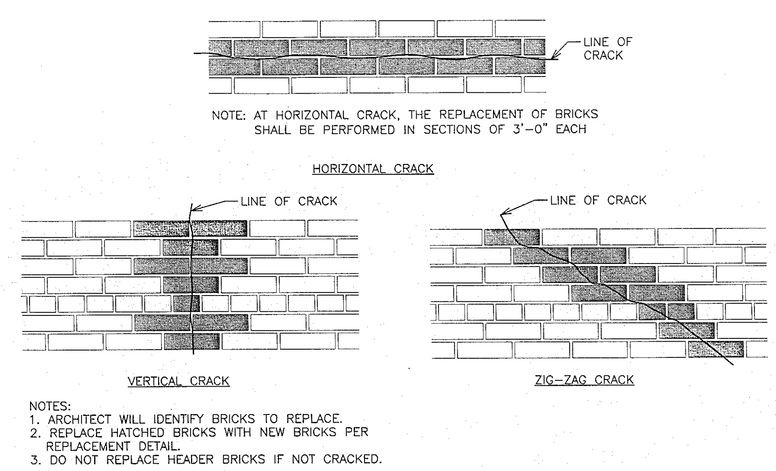

35 DETAIL – BRICK STICHING PATTERNS
SCALE: N.T.S.

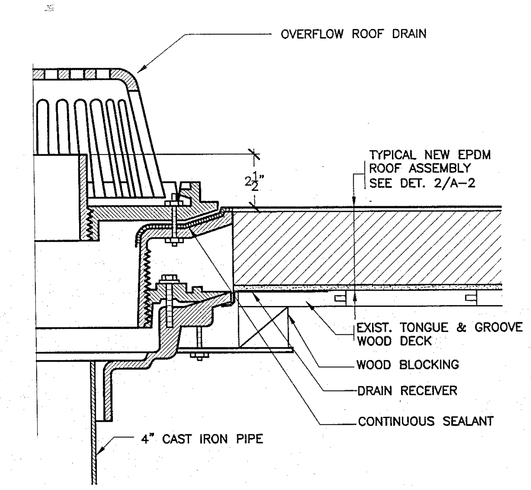

36 OVERFLOW ROOF DRAIN
SCALE: N.T.S.

AS-BUILT DRAWINGS

RECORD DRAWING CERTIFICATION
☑ AS BUILT-CHANGES AS NOTED
☐ AS BUILT-NO CHANGES

CONTRACTOR
NAME Paul Postlethwaite
SIGNATURE
TITLE ESTIMATOR
DATE 12-17-09

PROJECT COORDINATOR
NAME
SIGNATURE
TITLE
DATE

LEED INDUSTRIES
114 PEARL STREET
PORT CHESTER, N.Y. 10573

PROJECT TITLE
PARK AVENUE ELEMENTARY SCHOOL
ROOF REPLACEMENT
92 PARK AVENUE
DANBURY, CT 06810

DRAWING TITLE
ROOF DETAILS & POINTING DETAILS

DATE	ISSUED TO
8-24-2009	BLDG DEPT REVS
7-09-2009	BID

SCALE: AS NOTED
DRAWN BY
CHECKED BY
DRAWING NO. A-4
FILE NO. 08870.00

DANBURY BID NO. DFCS-10/01
C.T. BUREAU OF SCHOOL FACILITIES PROJECT NO. TEMP 024 - GPVX

PLOT DATE: December 08, 2009 – 10:19am

FILE: I:\08870.00 Danbury Park Ave. Elementary\DRAWINGS\SUBMISSIONS\AS BUILTS\A-4 Danbury ES Details 25- Rev 2009 0824.dwg